BOREAL
elevate your comfort

vento R32

EXPLODED VIEW & PARTS LIST

Model Number:
VEN09HPL132OA

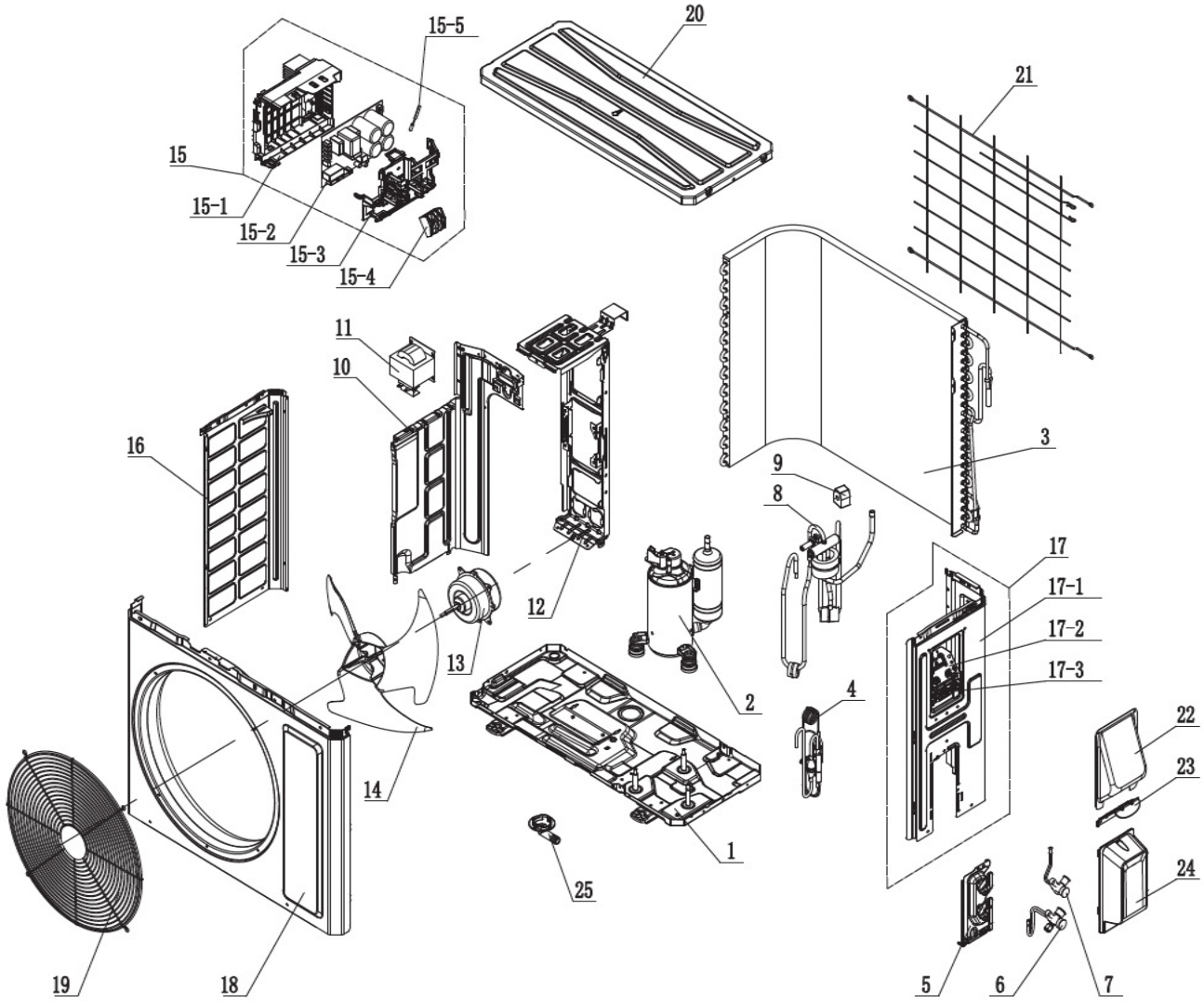

VEN09HPL132OA

No.	Part Description	Qty	Part No.
1	Chassis Sub-assy	1	017000060724P
2	Compressor and Fittings QXF-A082zC170	1	009001061100
3	Condenser Assy	1	01100206267001
4	Capillary Sub-assy	1	030006062579
5	Valve Support	1	012044060022P
6	Cut off Valve 3/8(N)	1	070001060029
7	Cut off Valve 1/4(N)	1	070001060022
8	4-Way Valve Assy	1	030152061476
9	4 Way Valve Coil	1	4300307301
10	Clapboard	1	012051060895
12	Motor Support	1	012048060149
13	Brushless DC Motor FW30R-ZL(10P)	1	15010406009507
14	Axial Flow Fan	1	10333428
15	Electric Box Assy	1	100002084468
15-1	Electric Box	1	200013060073
15-2	Main Board	1	300027064492
15-3	Electric Box Cover	1	20008206005801
15-4	Terminal Board(3 bit)	1	422000060075
15-5	Temperature Sensor 20KT/15KS/50KT	1	390001060069
16	Left Side Plate	1	012055060397P
17	Right Side Plate Assy	1	00008106033101
17-1	Right Side Plate	1	01205606038406P
17-2	Earthing Plate Sub-assy	1	017246000007
17-3	Wire Clamp	1	200015060021
18	Cabinet	1	01202206001202P
19	Front Grill	1	016004060016
20	Top Cover Assy	1	000097060345
21	Rear Grill	1	016001060095
22	Cable Cross Plate (apricot ash)	1	01220906002802P
23	Cable Cross Plate1 (apricot ash)	1	012209060027P
24	Valve Cover	1	20008706000403
25	Drainage Joint	1	26113009