BOREAL
elevate your comfort

novo R32

EXPLODED VIEW & PARTS LIST

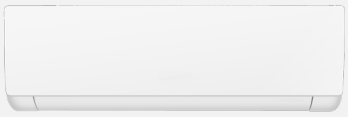

Model Number:
NOV12HPL132IA

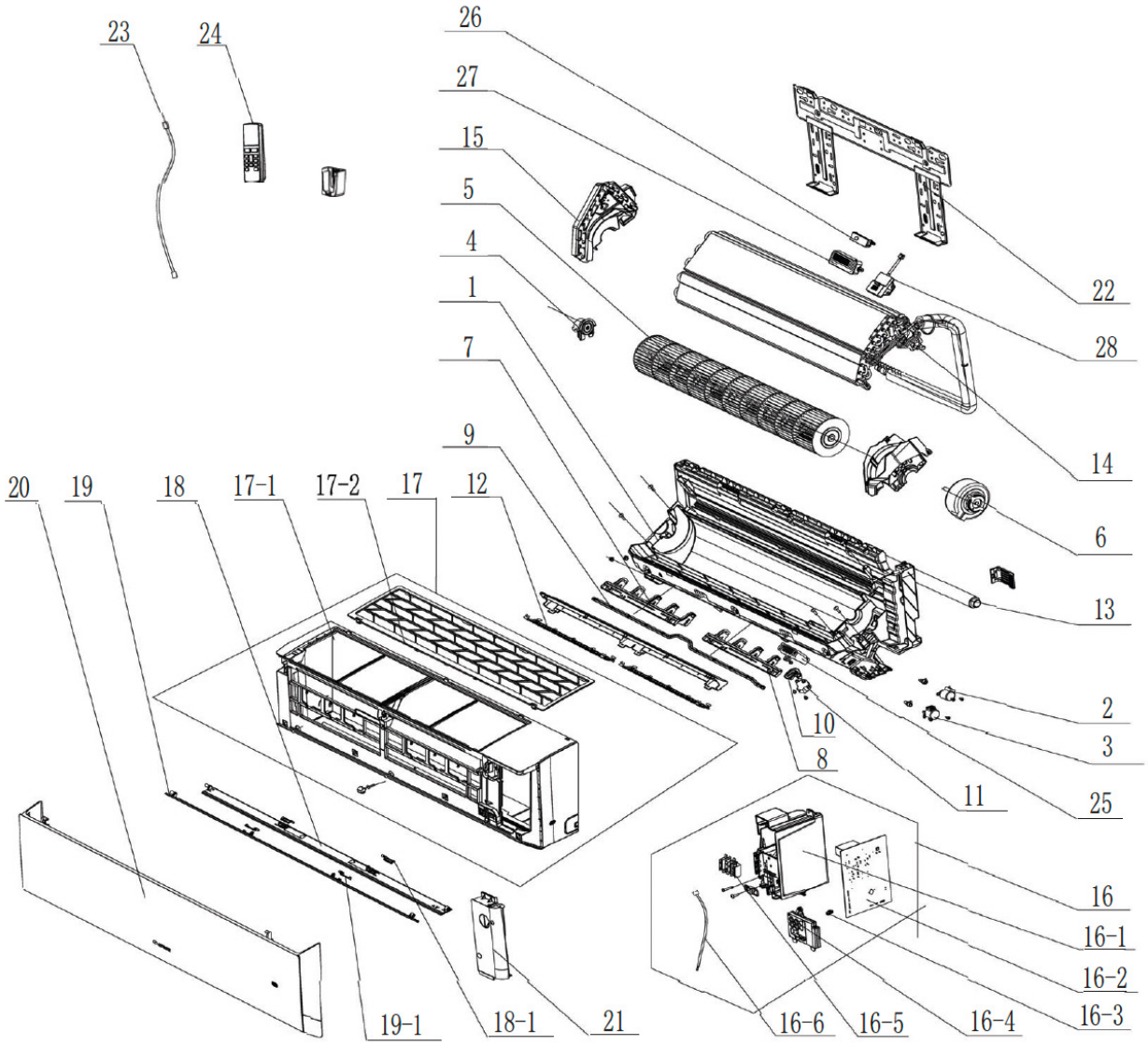

NOV12HPL132IA

No.	Part Description	Qty	Part No.
1	Rear Case Sub-Assy	1	00037706014101
2	Stepping Motor MP24BA	1	1521210710
3	Stepping Motor MP24AK (up and down swing)	1	1521200607
4	Axile Bush Sub-assy	1	10542047
NS	O-Gasket sub-assy of Bearing	1	76512051
5	Cross Flow Fan	1	103001060004
6	Brushless DC Motor FN15X-ZL(10P)	1	150104060157
NS	Left Axile Bush	2	10512037
8	Air Louver(right)	1	200007060065
7	Air Louver (left)	1	200007060064
9	Swing Lever	1	200035060028
10	Air Louver (Auto)	1	200007060066
11	Stepping Motor MP24HF (L AND R Sweep)	1	1521210704
12	Rear Grill Sub-assy	2	209016000003
13	Drainage Hose	1	05230014
14	Evaporator Assy	1	01100106043001P
15	Evaporator Support	1	200025060004
NS	Sensor Insert	1	42020063
28	Gas Sensor	1	34002406001601
16	Electric Box Assy	1	100002081632
16-1	Electric Box	1	200013060065
16-2	Main Board M869F2AZJ(US)	1	300002064896
16-3	Jumper	1	4202021902
16-4	Display Board	1	300001061425
16-5	Terminal Board(4 bit)	1	422000000022
16-6	Temperature Sensor 15KS/20KT-XH-4P-K3(wh)	1	3900031302
17	Front Case Assy	1	000002060393
17-1	Front Case	1	200002060080
17-2	Filter Sub-Assy	1	111001060318
18	Guide Louver Sub-assy	1	000136060139
18-1	Plug Pin	2	200033060002
19	Guide Louver Sub-assy	1	000136060111
19-1	Plug Pin	2	200033060002
20	Front Panel Assy	1	000003060752
21	Electric Box Cover	1	200082060053
22	Wall Mounting Frame Sub-assy	1	01252484
24	Remote Controller YBE1FBF	1	305001060204